RM7935/RM7965

64-bit Microprocessors with Integrated L2 Cache and EJTAG

Released Product Brief

PRODUCT HIGHLIGHTS

- New high performance MIPS64-compatible Instruction Set Architecture with integrated L2 cache and EJTAG:
  - 668, 750, 835 and 900 MHz operating frequency.
  - 1890 Dhrystone 2.1 MIPS @ 900 MHz.
  - Dual-issue superscalar 7-stage pipeline.
  - 16 Kbyte, 4-way set associative L1 Instruction cache.
  - 16 Kbyte, 4-way set associative L1 Data cache.
  - 256 Kbyte, 4-way set associative L2 cache with industry best 5-cycle access latency.
  - Fast Packet Cache to assists processing of packet data.
  - 8K entry branch prediction table.
  - Fully associative 64-entry TLB with dual pages.
  - High-performance Floating Point Unit (IEEE 754).
  - Fixed-point DSP instructions such as Multiply/Add, Multiply/Subtract, and 3 Operand Multiply.
- High-performance system interface:
  - 32-bit multiplexed address/data (SysAD) bus with RM7935.
  - 64-bit SysAD with RM7965.
  - Multiple outstanding reads with out-of-order return.
  - 1600 Mbyte/s peak throughput.
  - 200 MHz maximum frequency using HSTL signaling on the SysAD bus.
  - SysAD bus supports 1.5 V, 2.5 V, 3.3 V I/O logic.
  - Processor clock multipliers 2, 3, 3.5, 4, 4.5, 5, 5.5, 6, 6.5, 7, 7.5, 8, 8.5, 9, 10, 11, 12, 13, 14, 15, 16, 17.
- Integrated on-chip EJTAG capability.
- A 64-entry dynamic Trace Buffer for use in real-time trace and debug.
- Two 32-bit virtually-addressed Watch registers.
- Integrated performance counters:
  - 2 independent 32-bit counters.
  - Counts over 30 processor events including miss predicted branches.
  - Enables full characterization and analysis of application software.

BLOCK DIAGRAM

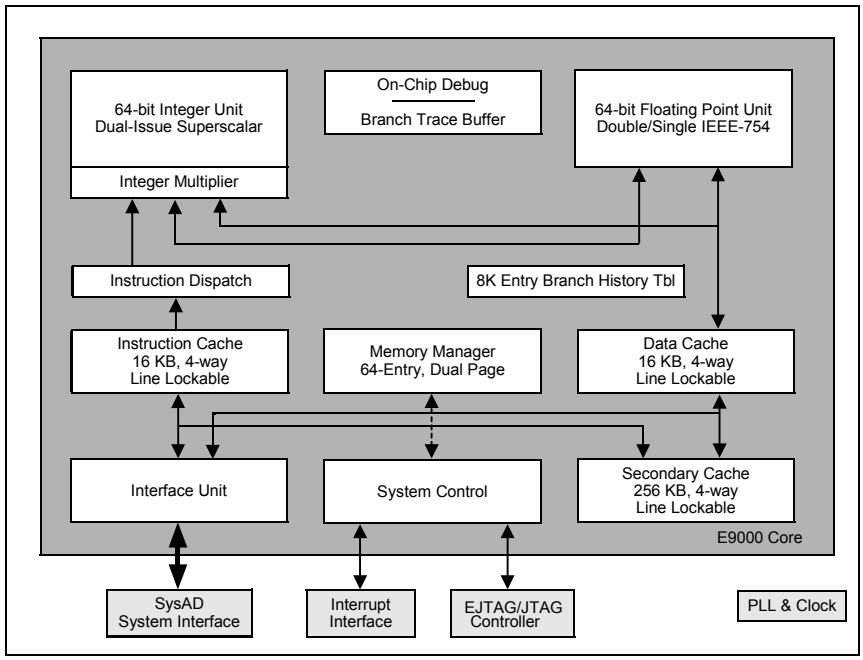

© Copyright PMC-Sierra, Inc. 2003–2006
All rights reserved. Proprietary and Confidential to PMC-Sierra, Inc. and for its customers' internal use.

PMC-SIERRA

PACKAGING

- RM7935 is available in a 128-pin enhanced exposed pad (eePad) package (20 x 20 mm), pin-compatible with the RM5231A and RM7035C exposed pad products.
- RM7965 package options:
  - 256-pin TBGA package, 27 x 27 mm, pin compatible with RM7065A and RM7065C TBGA products.
  - 216-pin enhanced exposed pad (eePad) package, 24 x 24 mm, pin compatible with the RM5261A and RM7965C exposed pad products.

DEVELOPMENT TOOLS

OPERATING SYSTEMS

- Linux
- VxWorks

EJTAG EMULATORS

- Wind River
- Corelis

EVALUATION BOARDS

- Momentum Computer
- Marvell Semiconductor

COMPANION CHIPS

- Marvell Semiconductor: (MV-64340, GT-64240)

APPLICATIONS

- Voice Gateways
- Multi-Service Access Platforms
- DSLAMs/Access Concentrators
- Remote Access Switches
- Web Switches
- Layer 3 Switches
- Backbone Switches/Routers
- RAIDs
- Set Top Boxes
- Networked Printers
- Cellular Base Stations

TYPICAL APPLICATIONS

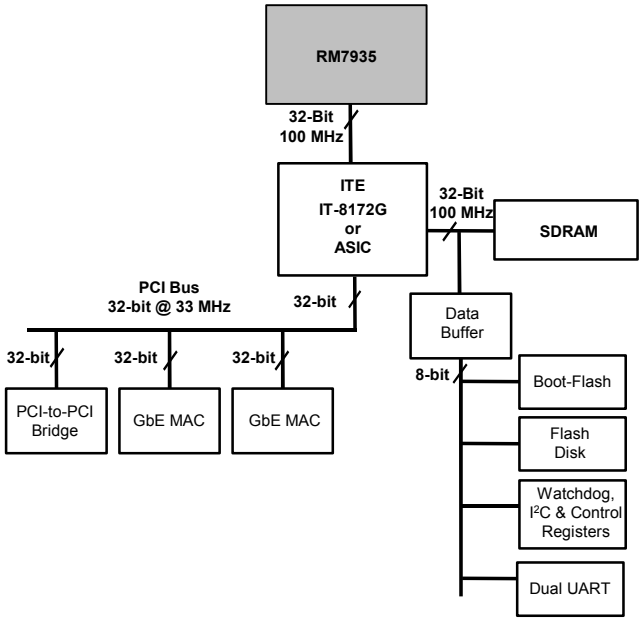

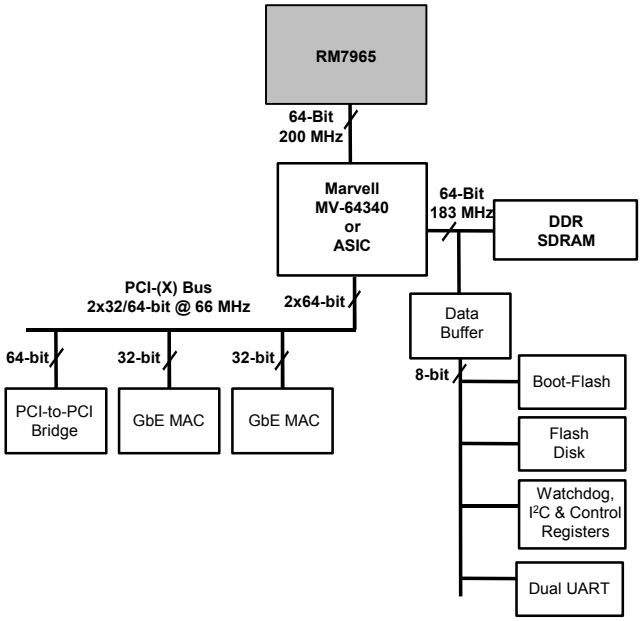

Corporate Head Office:
PMC-Sierra, Inc.
Mission Towers One
3975 Freedom Circle
Santa Clara, CA, 95054, U.S.A.
Tel: 1.408.239.8000
Fax: 1.408. 492.1157

Operations Head Office:
PMC-Sierra, Inc.
100-2700 Production Way
Burnaby, BC V5A 4X1 Canada
Tel: 1.604.415.6000
Fax: 1.604.415.6200

PMC-2030350 (R4) © Copyright PMC-Sierra, Inc. 2003–2006. All rights reserved. For a complete list of PMC-Sierra's trademarks , visit www.pmc-sierra.com/legal/. Other product and company names mentioned herein may be the trademarks of their respective owners.

For corporate information, send email to: info@pmc-sierra.com.

All product documentation is available on our web site at: www.pmc-sierra.com.

PMC
PMC-SIERRA