PM8399 SXP 24x3GSec

24-Port SAS Expander with Secure Zoning

Released Product Brief

PRODUCT OVERVIEW

The PM8399 SXP 24x3GSec device is a 24-port SAS expander with secure zoning capabilities.

PRODUCT HIGHLIGHTS

- Secure zoning capabilities as specified in T10 05-144 SAS-2 Zoning.
- STP initiator capability.
- Supports IPMB over TWI.
- Pin- and firmware-compatible with the PM8388 SXP 24x3G device.
- Virtual SSP support.
- Low-latency connection arbitration
- Supports standard and zone-aware table routing of 1024 entries, direct routing and subtractive routing.
- Integrated non-blocking cross bar switch allows any-port to any-port connections.
- Arbitrary SAS wide-port configurations.
- STP bridge function allows for either SAS or SATA target devices to be attached to any port.

BLOCK DIAGRAM

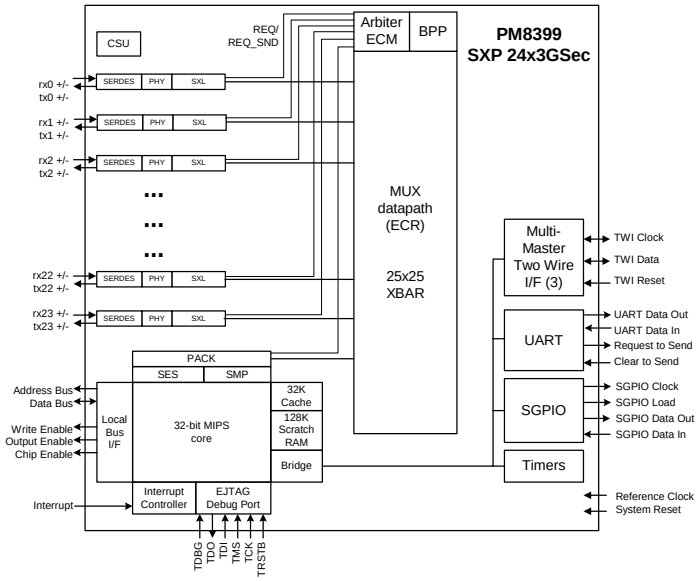

- Integrated MIPS-Powered processor for SAS SMP functions and SES support.
- Three configurable multi-master or slave mode TWI interfaces for device configuration and control of external interfaces.
- UART interface for system monitoring and debugging support.
- SFF-8485 compliant SGPIO interface provides expansion for up to 144 GPIOs.

ZONING FEATURES

- Supports 128 groups or domains.
- SMP for PHY group assignment.
- Supports zoning fabric supervisor privileges.
- Transparent to SAS Initiators and Targets.
- Compatible with legacy SAS Expanders.

HIGH-SPEED I/O

- 1.5 Gbit/s and 3.0 Gbit/s operation.
- Automatic negotiation of link speed.
- Accepts Spread Spectrum Clocking (SSC) from SATA HDDs.
- Programmable transmit pre-emphasis and receiver equalization.
- Programmable transmit output swing to support both SATA and SAS levels.
- Integrated resistive termination and AC coupling.

STATISTICS AND PERFORMANCE MONITORING

- Per-port error counters to provide comprehensive diagnostic functions.
- Programmable performance monitoring counters and interrupt generation.
- Per-link PRBS and CJPAT pattern generator for link-integrity diagnostics.

PHYSICAL

- 0.13 µm (3.3 V I/O supply and 1.2 V core) CMOS technology.
- 27 x 27 mm 352-pin CSBGA package.

PMC-2050741, Issue 2
© Copyright PMC-Sierra, Inc. 2006
All rights reserved. Proprietary and Confidential to PMC-Sierra, Inc. and for its customers' internal use.

PMC-SIERRA

FIRMWARE DEVELOPMENT KIT

- SES API for using SES pages and commands over the SAS link.
- SCSI-3 API for underlying access to the SAS Port.
- SAS/STP link layer, SMP/SSP/STP Transport Layer protocols.
- SMP routing management including topology discovery.
- API for downloading firmware over the SAS link.
- Expander Diagnostics API.
- Disk spin-up control.
- Disk Qualification API.
- Peripheral Drivers for TWI, UART, SGPIO, Timer.

THIRD-PARY SUPPORT

- ThreadX RTOS from Express Logic.
- Green Hills MULTI Development Environment and EJTAG Emulator.

APPLICATIONS

- Blade Server.
- Enterprise Server Storage.
- External Fabric Attached Storage.

TYPICAL APPLICATIONS

BLADE SERVER

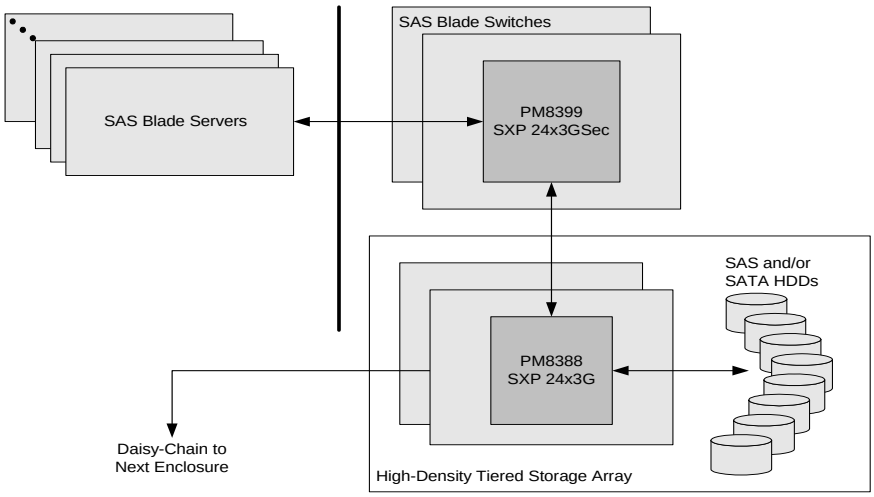

SXP 24X3GSEC ZONED DOMAINS

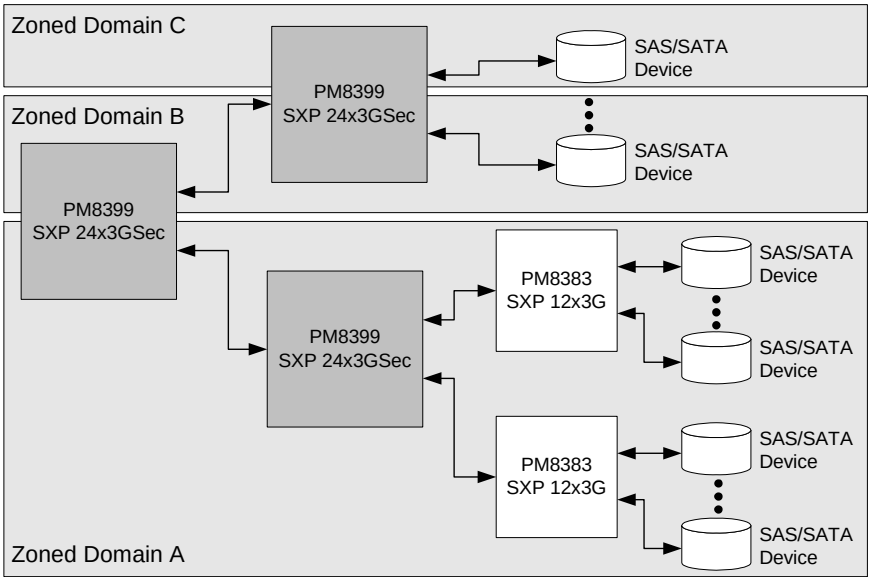

Corporate Head Office:
PMC-Sierra, Inc.
Mission Towers One
3975 Freedom Circle
Santa Clara, CA, 95054, U.S.A.
Tel: 1.408.239.8000
Fax: 1.408. 492.1157

Operations Head Office:
PMC-Sierra, Inc.
One Innovation Place
100-2700 Production Way
Burnaby, BC V5A 4X1 Canada
Tel: 1.604.415.6000
Fax: 1.604.415.6200

PMC-2050741 (R2)
© Copyright PMC-Sierra, Inc. 2006. All rights reserved.
For a complete list of PMC-Sierra's trademarks and registered trademarks, visit: www.pmc-sierra.com/legal/
For corporate information, send email to: info@pmc-sierra.com.
All product documentation is available on our web site at: www.pmc-sierra.com.

PMC-SIERRA